DATRON
Smart Manufacturing Solutions

DATRON M8Cube

DATRON M8Cube

Milling, drilling and engraving
The DATRON M8Cube is the best choice for efficient machining of housings, profiles and panels made of aluminium.
But other nonferrous metals or composite materials can also be machined most efficiently with the M8Cube. Short setup times, very low power consumption and excellent value for money allow high cost-effectiveness, even at low volumes.

Your benefits at a glance

- **You save space!**
  Very large machining surface with a small footprint.
- **You save money!**
  The M8Cube is accessible to buy and has extremely low acquisition and operating costs.
- **You get new opportunities in milling, drilling and engraving!**
  The M8Cube has been developed for machining high-tech materials with small tools (Ø 0.1 mm to 20 mm).
  Innovative „Made in Germany“ milling technology for your success.

DATRON **M8**Cube

M8Cube Highlights

- High dynamics through optimised control and mechanical structure designed for speed and stiffness
- Very high cutting performances with the smallest tools by means of high-speed precision spindles with up to 60,000 rpm and 0.6 kW to 3.0 kW output
- Stiff, vibration-free design of the machine allows excellent surface finishes when machining
- High precision due to high-quality linear guides, ball screw spindles, HSK-E 25 tool inserts (optional) and precision-crafted structural elements

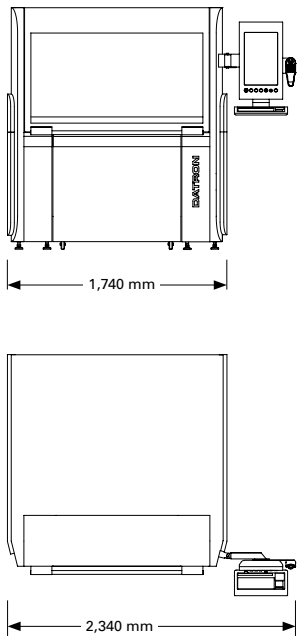

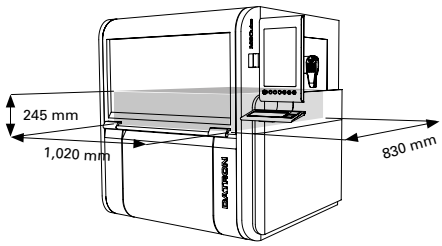

Traverse paths

Status display by means of signal LEDs integrated into the operating terminal and the portal to display machine status (optional).

Precision spindle with a concentricity better 2 µm and HSK-E 25 tool holding fixture (optional).

XYZ measuring system integrated: Measuring functions and very easy-to-use material/tolerance compensation (optional).

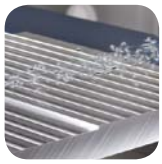

Saves resources: Minimum quantity lubrication from 30 ml/hour. Minimal cleaning costs (optional).

Up to 60,000 rpm: High cutting performance with small tools. High dynamic HSC control system.

5-axis milling with rotary/ swivel table for precise multi-sided machining of small parts (optional).

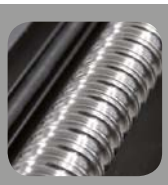

Precision ball-screw spindles and linear guides from leading suppliers. Brushless direct drives in the X/Y-axes.

Technical Data	DATRON **M8Cube**
Machine table	Solid polymer concrete table with steel column, extremely rigid portal design with double-sided Y drive with covered guides
Traverse path (X x Y x Z)	1,020 mm x 830 mm x 245 mm; with 720 mm tool changer in Y
Portal passage	200 mm
Installation dimensions without operating terminal (W x D x H)	1,740 mm x 1,740 mm x 1,950 mm
Conical holding fixture integrated into the table	✓
Fast digital servo control with Microsoft® Windows® control computer	✓
Easy-to-use hand-held control unit	✓
Drive system: Brushless servo motors with absolute encoders, ball-screw spindle for each axis	✓
Minimal quantity lubrication	✓
Machining spindle	Precision high-frequency spindles from 0.6 kW to 3.0 kW with up to 60,000 rpm
Tool changer with integrated tool length sensor	5-fold tool changer with HSK-E 25 (optional 10-fold), 15-fold tool changer with direct shank (optional 30-fold)
Feed	up to 22 m/min
Positioning feed	up to 22 m/min
Weight	approx. 1,300 kg
Article Number	**0A03200A/B**

DATRON AG
In den Gänsäckern 5
64367 Mühltal, Germany

Phone: +49 (0) 6151-1419-0
Fax: +49 (0) 6151-1419-29
www.datron.de

DATRON_M8Cube_EN_TD_030413